RGB/DMX контроллер ARC3010-B0 (12/24V, 170pix RGB, IR-ДУ)

Preface

Applying standard DMX512/DMX+ protocol, ARC3010-B0 creates various color and brightness for DMX512-like lighting fixtures. By using software LightShow[P], user can easily create or edit their own lighting effects with computer, and then download the lighting effects to the controller through USB port. User may simply choose and show various lighting effects by using IR remote controller. This application note will highlight some of common issues while using ARC3010-B0.

Environment

a. ARC3010-B0 does not have waterproof function and should be kept away from water to avoid circuit short and damage.
b. ARC3010-B0 is applicable to an operating temperature of 0 ~ 60 °C, beyond this range will result in the phenomenon of usage anomalies.

Power source

a. The input voltage of ARC3010-B0 is in the range of DC 8V ~ 24V, please use adapter (AC100-240V to DC12V) shipped with ARC3010-B0 correctly to avoid product damaged.
b. Please use correct and stable AC power source (AC100-240V) and connect to the ground to prevent the electronic circuit damage caused by electrostatic discharge or spark.
c. If other drivers or devices connected to DC power supply, please make sure that Cathode(V-) of all DC power supply must be connected together and grounded.
d. Please do not turn power on until all the devices are connected together correctly.

Cable selection

CAT5 shielded twisted pair cable with RJ-45 connector is recommended for DMX OUT to ensure the best transmission quality and the maximum transmission distance can be up to 100 meters, its pin description is as follows:

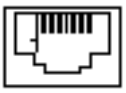

RJ-45(Female)

Pin	Description
1	DMX512 OUT +
2	DMX512 OUT -
3 ~ 6	Not use
7 ~ 8	Ground

As for the other end of shielded twisted pair cable connecting to other non-ARC products, please refer to the user manual of those products. The following pin/cabling instructions are for ARC related products:

Product Model	ARC3010-B0	
	DMX512 OUT+	DMX512 OUT-
US6601	DMX IN brown color wire	DMX IN light brown color wire
ARC3610(W)	CABLE2 brown color wire	CABLE2 brown-white color wire
ARC38XX series	CABLE2 brown color wire	CABLE2 brown-white color wire
ARC3702	R+	R-
ARC3730-W0	CABLE2 brown color wire	CABLE2 brown-white color wire

Synchronization is a new function of ARC3010-B0 controller which can be cascaded up to 20 units at the same time. Shield twisted pair cable is recommended for sync signal transmission and total maximum transmission distance can be up to 100 meters. Plug sync connector into RS485 socket, and then insert twisted-pair cable into the sync connector and lock with screw, its pin description is as follows:

1

Pin	Description
1	RS485 data+
2	RS485 data-
3	ground

Control signals

DMX is abbreviation of "Digital multiplex" transmission. USITT (United States Theater Technology Association) developed DMX512 (1986) protocol based on the dimming control of lighting standard interface in 1986. This protocol has been amended by PLASA (Professional Lighting and Sound Association of the United States) and the USITT Joint Working Group as DMX512 (1990) version in 1990.

- DMX512 protocol complies with the electrical characteristics of standard EIA-485 and sends asynchronous data with the transmission rate of 250kbps
- DMX512 standard connection adopts the "daisy-chain" approach, the signal source connected to input port of the first device, output port of the first device connected to input port of the second device, and so on. The standard allows up to 32 devices in a single DMX link.

Default control signal of ARC3010-B0 is DMX+ protocol. DMX + is a trademark owned by ARC. For the use of DMX + as the transport protocol, all the drive modules or devices must support this protocol as well. ARC3010-B0 can control up to 170 RGB pixels by using DMX512 , and 256 RGB pixels brightness and color changes by using DMX +.

In general, the issues of signal abnormality or distortion are most likely caused by the following reasons:
a. The use of wrong or improper cable.
b. Pin cabling error.
c. Power interference or without proper connecting to the ground.
d. Power line and DMX512 signal cable bound together causing DMX512 signal interference.

Application & Example

ARC3010-B0 is suitable for the applications like LED walls, advertising signage, and architectural building.
Example 1 : Architectural decoration

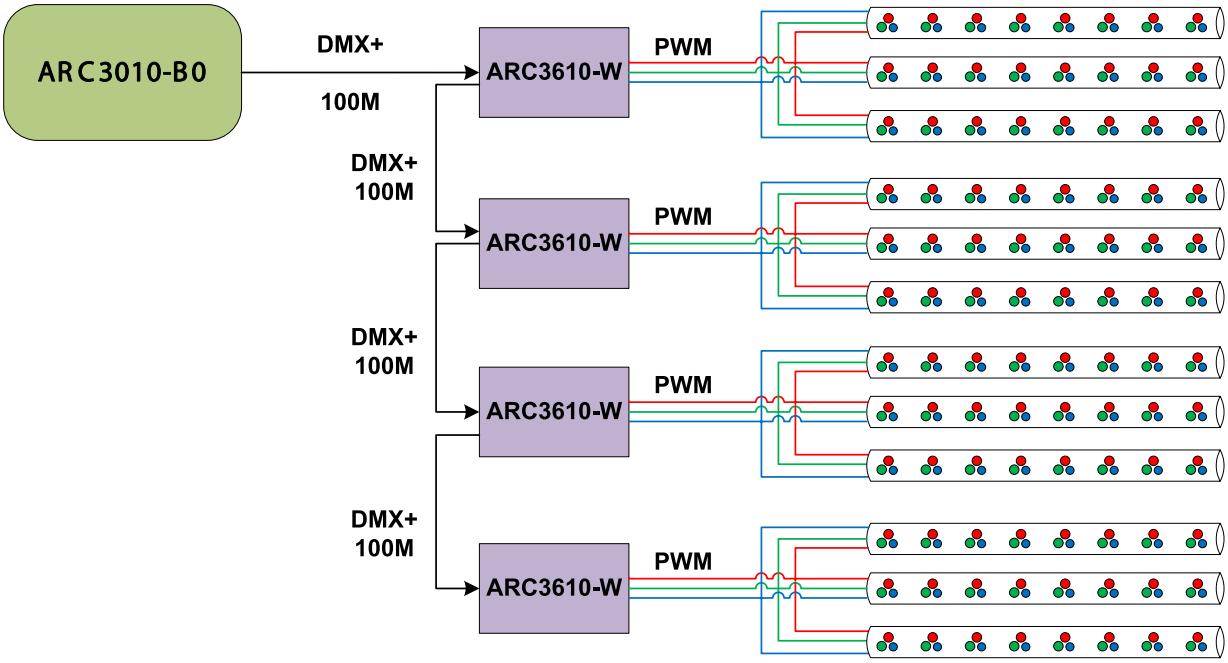

Example 2 : RGB Cluster

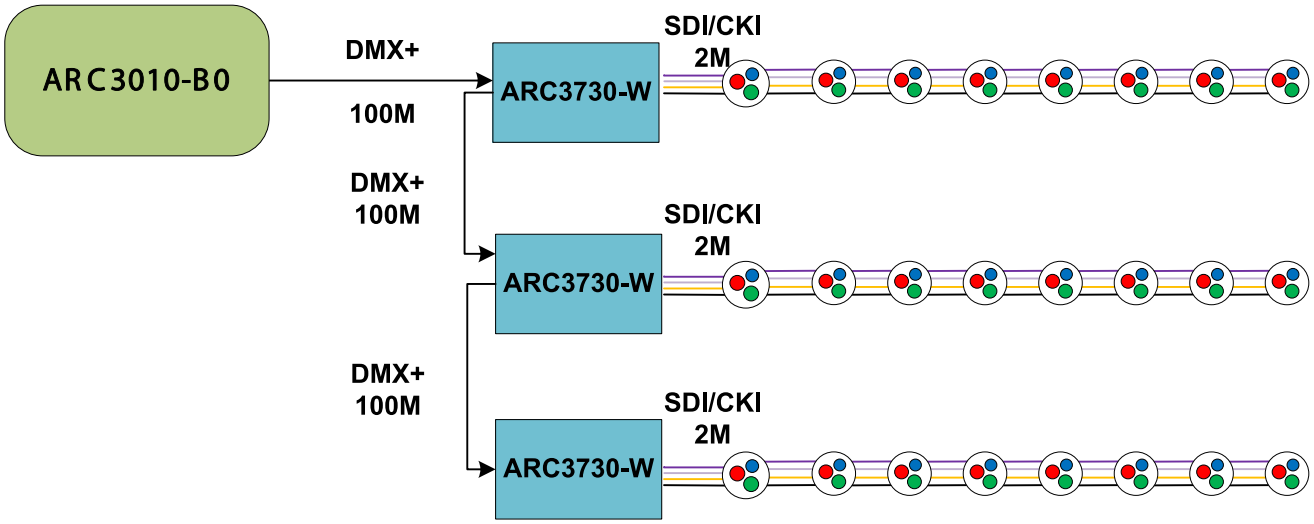

Troubleshooting

Problems	Causes	Solution
Power indicator (green) off. Other lights off.	AC to DC 12V adaptor damaged	Change AC to DC 12V Adaptor. When changing to non-OEM Adaptor, pay attention to +/-polarity.
	Constant voltage circuit of the controller damaged.	Send back to service center.
Power indicator (green) on. DMX OUT indicator (yellow) off.	DMX OUT controlling signal units in the controller damaged	Send back to service center
DMX OUT indicator (yellow) on. But the lights don't display or display abnormally	Connection error	Recheck DMX+ and DMX-connection.
	Contact failure	Recheck DMX+ and DMX-contact status
	Switched to "Display OFF" mode	Press the power button of the controller.
	Switched to "Display Pause" mode	Press the "Pause" button of the controller to display.
	Choose fixed color segment 15 or segment 16	Choose other segments to see if display normally.
	Current displayed segment is empty	Switch to segments with content.
	DMX OUT mode mismatch	Switching to DMX512/DMX+ mode by following the instruction printed on the cover of 3010-Bo controller
Light effects can't be downloaded to the controller.	Total file size over 2 Mbytes limitation.	Make sure file size is not over limitation.
	Connection error or not connected between PC and controller	Recheck connection line.
	Windows didn't detect available USB port	Communication port used by other application, please close application.
IR remote controller failed to function properly	Out of battery	Replace battery.
	Remote controller damaged	Send back to service center.
	Receiver of controller blocked	Move controller to proper place to receive IR control signal.
	Receiver of controller damaged	Send back to service center.
USB Driver can be found but can not communicate with controller to download or control	Software communication ports setting error	Refer to the instructions and reset the communication ports.
The controller can not save start-up status	Memory circuit in the controller damaged	Send back to the service center.
The controller doesn't display the downloaded effects	Does not switch to the downloaded user-defined segments	Use the remote controller to switch to the downloaded segments.
Display the user-defined segments too fast / slow	The user-defined segments shall be displayed at the speed of 9.	Use the controller to switch the speed to 9.
Compound effects cannot display by schedule	Time IC damaged	Send back to the service center.
	Low battery or damaged	Replace battery.